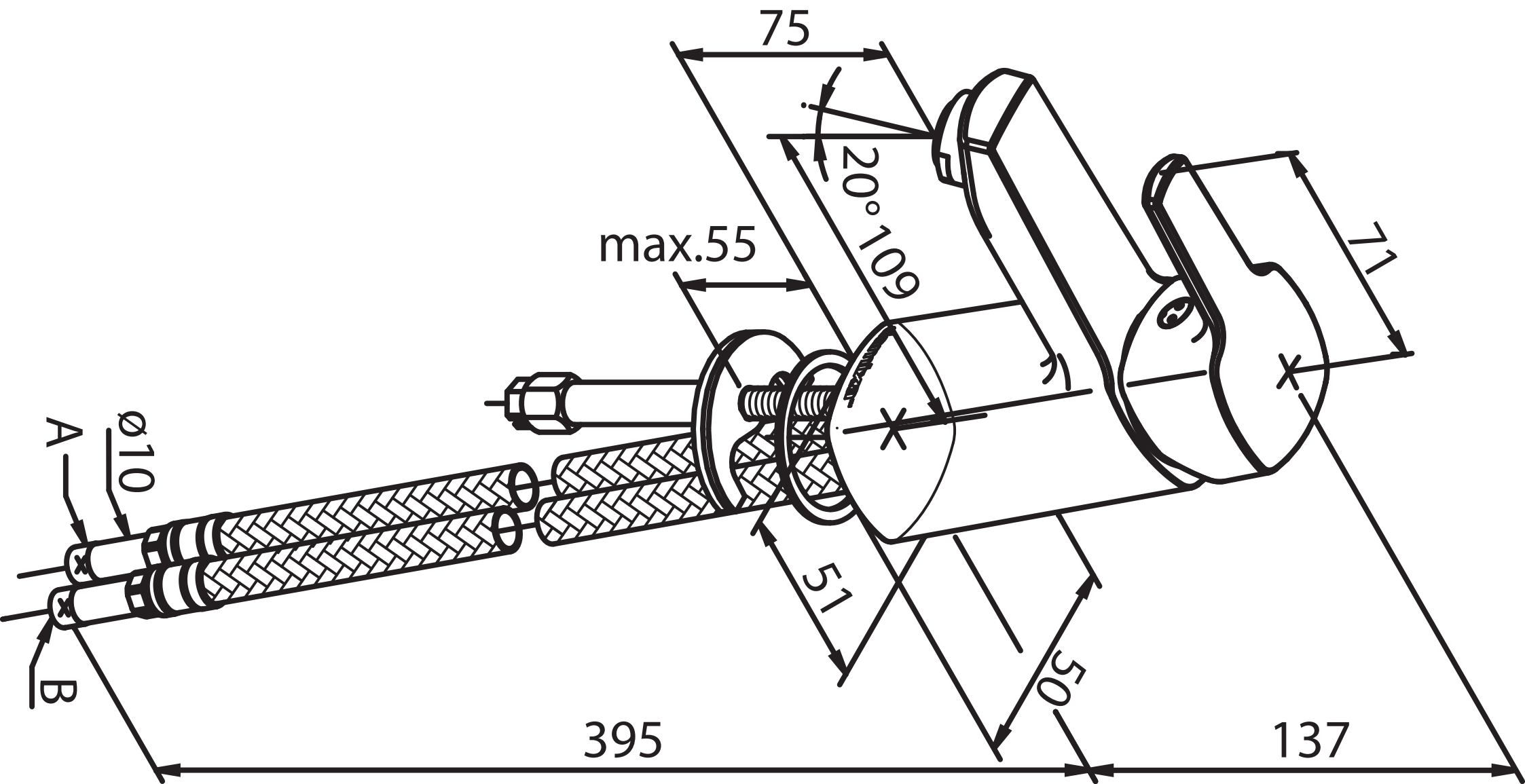
75
20°
109
max.55
71
A
ø10
B
51
50
395
137